DD-18 GOLD ET2
GOLD dryers

EASY TOUCH 2

User friendly and totally programmable 7” ET2
USB Connection.
Online platform free of charge for programming, telemetry, data analysis
Videos on display (ads, instructions, etc.)
37 languages



FEATURES

Reversing drum action as standard
Stainless steel drum as standard
Frequency inverter as standard

EFFICIENCY

CARE DRY - Intelligent humidity control with new drum inlet temperature control.
AIR RE-CYCLE - Efficient air recirculation system
INSULATED PANELS - Complete thermal insulation of panels and double door glass
OPTIMAL FLOW - New optimized system of mixed airflow
Big fluff filter

VERSATILITY

Make to order - customisation
WET CLEANING

CONNECTIVITY

Danube Online communication - IoT as standard
Remote technical service
Management of laundries

ERGONOMICS

Drawer as fluff filter, stainless steel mesh
Big door diameters
Opening sense of door adjustable on site

MAINTENANCE

Hinged control panel: easy and ergonomic access
Technical menu: statistics, data recovery for after-sales service, software updates, etc.
Easy access to components

OTHERS

Grey skinplate outer casing, stainless steel look
NEW : transmission by gear motor on models DD-45 to 80
SPRINKLER - Integrated Fire Extinguishing System
SOFT DRY - new drum with stamped holes
COOL DOWN - anti-wrinkle at the end of the cycle
Electric, gas or steam heating
CE approved

OPTIONS

- NG Natural gas heated tumble dryer (LPG as standard)
- RD Opposite door opening 11-35
- TR Tropicalized model (ET2)
- AF Back panel with air filter from 11 to 35
- F06 Fluff filter with grid 0,6mm (standard is 0,3mm)
- AU AGA certification for gas dryers (Australia)
- F12 Fluff filter with grid 1,2mm (standard is 0,3mm)
- SSC Stainless steel outer casing (AISI-304) 14, 18
- SSF Stainless steel front panel (AISI-304) 11, 14, 18
- BSS Stainless steel steam battery 11-14-18
- LPB Low steam pressure battery 11-14-18
- 400V 3N 60 Hz DD- 11-35
- 230V 3~ 50 Hz DD-11, 14, 18 E
- 230V 3~ 60 Hz DD-11, 14, 18 E
- 230V 3~ 60 Hz DD-11,35 G/S
- 440/480V 3~ 60 Hz DD-11, 14, 18
- RP Reduced power (12kw instead of 18kw) for electric heated 14kg and 18kg models.
- WB Wooden packing 14,18
- IoT licence - Danube Online

CAPACITY & DRUM	UNIT.	DD-18 GOLD ET2
Capacity 1/18	Kg	18,3
	lb	40,4
Capacity 1/20	Kg	16,5
	lb	35
Ø Drum	mm	750
	inch	29,5
Drum length	mm	746
	inch	29,4
Drum volume	l	330
	cu ft	11,64
Ø Door hole	mm	574
	inch	22,60
Door center height	mm	976
	inch	38,4
Height from floor to bottom of door	mm	618
	inch	24,33
ELECTRIC HEATING		
Evaporation capacity	L/h	14,90
	US gallon/h	3,94
Hourly output	Kg/h	30
	lb/h	66,14
Installed heating power	kW	18
Installed electrical power	kW	18,97
Drum motor power	kW	0,37
GAS HEATING		
Evaporation capacity (gas model)	L/h	16,80
	US gallon/h	4,44
Hourly output (gas model)	Kg/h	33,40
	lb/h	73,63
Installed gas heating power	kcal/h	17627
	Btu/h	69996
Installed gas heating power	kW	20,5
Installed electrical power	kW	0,97
Instant propane gas consumption (G31)	Kg/h	1,76
	lb/h	3,88
Instant natural gas consumption (G20)	m^3/h	2,17
	cfm	1,28
Ø Gas inlet	BSPP ISO 228-1	1/2"
STEAM HEATING		
Installed steam heating power	kW	30
	Btu/h	102364
Installed electrical power	kW	0,97
Steam consumption (8 barG) - Standard	kg/h	53
Steam consumption (116 psiG)	lb/h	63,8
Steam pressure	barG	6 - 9
	psiG	87 - 130,5
Standard steam inlet - outlet	BSPT- ISO7.1	3/4"
Standard steam inlet - condensate outlet	NPT ANSI B1.20.1 Tapered	3/4"
Steam consumption (5 barG) - Low Pressure	kg/h	57
Steam consumption (72,5 psiG) - Low Pressure	lb/h	68,7
Steam pressure (low pressure)	barG	3 - 6
	psiG	43,5 - 88
Low pressure steam inlet - outlet	BSPT- ISO7.1	1"
VENTILATION		
Fan motor power	kW	0,55
Nominal air flow rate	m^3/h	1.200
	cfm	706

Ø Fume exhaust	mm	200	
Ø Fume exhaust	inch	7,87	
HEAT EMISSION			
Maximum total heat emission	kW	1,4	
	Btu/h	4916	
Max. front heat emission	kW	0,9	
	Btu/h	3073	
CONNECTIONS		E	G / S
Tension 230V - I + N + T	Nº x mm² / A	-	3 x 1,5 / 16A
Tension 230V - III + T	Nº x mm² / A	4 x 16 / 63A	3 x 1,5 / 16A
Tension 400V - III + N + T	Nº x mm² / A	5 x 10 / 32A	3 x 1,5 / 16A
NET DIMENSIONS / PACKING DIMENSIONS			
Net / gross width	mm	785 / 865	
	inch	30,9 / 34,1	
Net / gross depth	mm	1.125 / 1.210	
	inch	44,3 / 47,6	
Net height / gross height	mm	1.694 / 1.840	
	inch	66,7 / 72,4	
Net / gross weight	Kg	187 / 200	
	lb	412 / 441	
OTHERS			
Sound level	dB	64	

* Sizes Gas or steam 45 kg model same as model 80 kg (incorporates the batteries at the back)

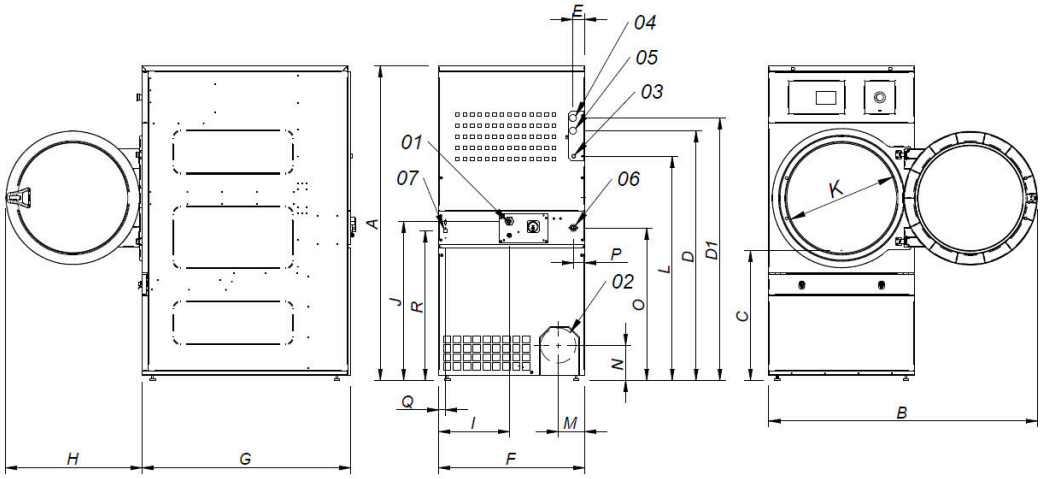

01 POWER SUPPLY
02 FUMES OUTPUT Ø200
03 GAS INLET 1/2"
04 STEAM INLET 3/4"
04 STEAM INLET 1" (22kg)
05 CONDENSATE OUTLET 3/4"
05 CONDENSATE OUTLET 1"(22kg)
06 SPRINKLER VALVE 3/4"
07 ETHERNET CONNECTION

	A	B	C	D	D1	E	E1	F	G	H	I	J	K	L	M	N	O	P	Q	R
DD-18	1694*	1447	689	1354	1422	68	68	785	1125	735	380	870	575	1226	133	180	830	65	35	805
DD-22	1812*	1552	743	1430	1532	112	55	890	1255	735	107	920	575	1344	238	180	885	65	37	860

* Measurement with legs mounted (30mm)