DD-28 GOLD ET2
GOLD dryers

EASY TOUCH 2

User friendly and totally programmable 7” ET2
USB Connection.
Online platform free of charge for programming, telemetry, data analysis
Videos on display (ads, instructions, etc.)
37 languages



FEATURES

Reversing drum action as standard
Stainless steel drum as standard
Frequency inverter as standard

EFFICIENCY

CARE DRY - Intelligent humidity control with new drum inlet temperature control.
AIR RE-CYCLE - Efficient air recirculation system
INSULATED PANELS - Complete thermal insulation of panels and double door glass
OPTIMAL FLOW - New optimized system of mixed airflow
Big fluff filter

VERSATILITY

Make to order - customisation
WET CLEANING

CONNECTIVITY

Danube Online communication - IoT as standard
Remote technical service
Management of laundries

ERGONOMICS

Drawer as fluff filter, stainless steel mesh
Big door diameters
Opening sense of door adjustable on site

MAINTENANCE

Hinged control panel: easy and ergonomic access
Technical menu: statistics, data recovery for after-sales service, software updates, etc.
Easy access to components

OTHERS

Grey skinplate outer casing, stainless steel look
NEW : transmission by gear motor on models DD-45 to 80
SPRINKLER - Integrated Fire Extinguishing System
SOFT DRY - new drum with stamped holes
COOL DOWN - anti-wrinkle at the end of the cycle
Electric, gas or steam heating
CE approved

OPTIONS

- NG Natural gas heated tumble dryer (LPG as standard)
- RD Opposite door opening 11-35
- TR Tropicalized model (ET2)
- AF Back panel with air filter from 11 to 35
- F06 Fluff filter with grid 0,6mm (standard is 0,3mm)
- AU AGA certification for gas dryers (Australia)
- F12 Fluff filter with grid 1,2mm (standard is 0,3mm)
- Reinforced drum for heavy-duty use 28-35
- SSC Stainless steel outer casing (AISI-304) 28
- SSF Stainless steel front panel (AISI-304) 28, 35
- BSS Stainless steel steam battery 28-35
- LPB Low steam pressure battery 28,35
- 400V 3N 60 Hz DD- 11-35
- 230V 3~ 50 Hz DD-22-35 E
- 230V 3~ 60 Hz DD-22,35 E
- 230V 3~ 60 Hz DD-11,35 G/S
- 440/480V 3~ 60 Hz DD-22-35
- WB Wooden packing 28
- IoT licence - Danube Online

CAPACITY & DRUM	UNIT.	DD-28 GOLD ET2
Capacity 1/18	Kg	30,6
	lb	67,3
Capacity 1/20	Kg	27,5
	lb	65
Ø Drum	mm	947
	inch	37,3
Drum length	mm	780
	inch	30,7
Drum volume	l	550
	cu ft	19,42
Ø Door hole	mm	802
	inch	31,6
Door center height	mm	1.040
	inch	40,9
Height from floor to bottom of door	mm	578
	inch	22,74
ELECTRIC HEATING		
Evaporation capacity	L/h	26,80
	US gallon/h	7,08
Hourly output	Kg/h	51,60
	lb/h	113,76
Installed heating power	kW	30
Installed electrical power	kW	31,35
Drum motor power	kW	0,55
GAS HEATING		
Evaporation capacity (gas model)	L/h	31,80
	US gallon/h	8,40
Hourly output (gas model)	Kg/h	61,10
	lb/h	134,70
Installed gas heating power	kcal/h	35254
	Btu/h	139899
Installed gas heating power	kW	41
Installed electrical power	kW	1,35
Instant propane gas consumption (G31)	Kg/h	3,51
	lb/h	7,74
Instant natural gas consumption (G20)	m^3/h	4,34
	cfm	2,55
Ø Gas inlet	BSPP ISO 228-1	1/2"
STEAM HEATING		
Installed steam heating power	kW	50,10
	Btu/h	170948
Installed electrical power	kW	1,35
Steam consumption (8 barG) - Standard	kg/h	89
Steam consumption (116 psiG)	lb/h	107,2
Steam pressure	barG	6 - 9
	psiG	87 - 130,5
Standard steam inlet - outlet	BSPT- ISO7.1	1"
Standard steam inlet - condensate outlet	NPT ANSI B1.20.1 Tapered	1"
Steam consumption (5 barG) - Low Pressure	kg/h	93
Steam consumption (72,5 psiG) - Low Pressure	lb/h	112
Steam pressure (low pressure)	barG	3 - 6
	psiG	43,5 - 88
Low pressure steam inlet - outlet	BSPT- ISO7.1	1" 1/2
VENTILATION		
Fan motor power	kW	0,75
Nominal air flow rate	m^3/h	1.500
	cfm	883

Ø Fume exhaust	mm	200	
Ø Fume exhaust	inch	7,87	
HEAT EMISSION			
Maximum total heat emission	kW	2,4	
	Btu/h	8194	
Max. front heat emission	kW	1,5	
	Btu/h	5121	
CONNECTIONS		E	G / S
Tension 230V - I + N + T	Nº x mm² / A	-	3 x 1,5 / 16A
Tension 230V - III + T	Nº x mm² / A	4 x 35 / 100A	3 x 1,5 / 16A
Tension 400V - III + N + T	Nº x mm² / A	5 x 16 / 63A	3 x 1,5 / 16A
NET DIMENSIONS / PACKING DIMENSIONS			
Net / gross width	mm	985 / 1.065	
	inch	38,8 / 41,9	
Net / gross depth	mm	1.054 / 1.154	
	inch	41,5 / 45,4	
Net height / gross height	mm	1.975 / 2.080	
	inch	77,8 / 81,9	
Net / gross weight	Kg	230 / 260	
	lb	507 / 573	
OTHERS			
Sound level	dB	65	

* Sizes Gas or steam 45 kg model same as model 80 kg (incorporates the batteries at the back)

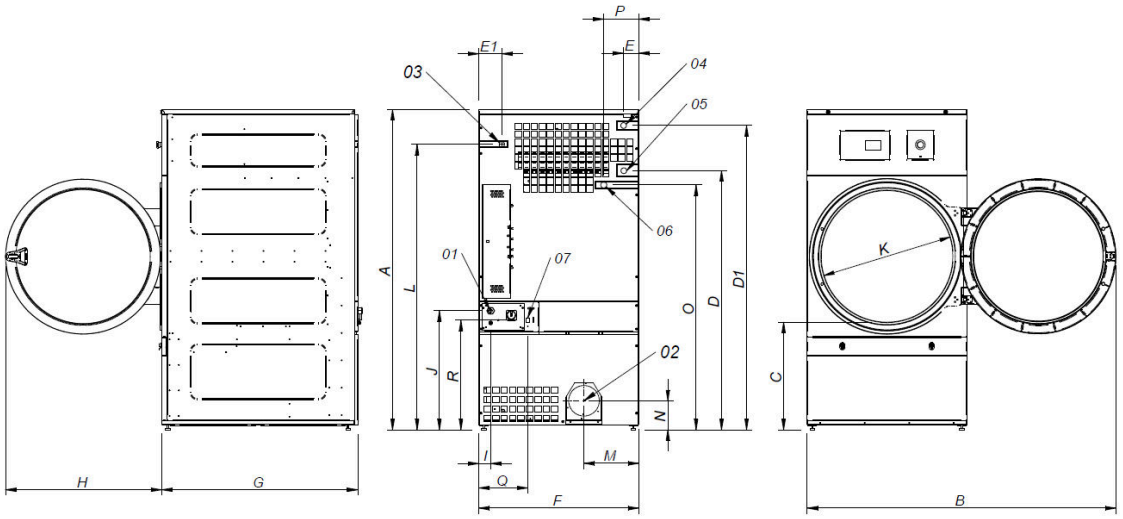

01 POWER SUPPLY
02 FUMES OUTPUT Ø200
03 GAS INLET 1/2"
04 STEAM INLET 1"
05 CONDENSATE OUTLET 1"
06 SPRINKLER VALVE 3/4"
07 ETHERNET CONNECTION

	A	B	C	D	D1	E	E1	F	G	H	I	J	K	L	M	N	O	P	Q	R
DD-28	1975*	1910	660	1590	1875	102	130	985	1054	970	70	730	802	1760	337	178	1510	215	301	676
DD-35	1975*	1910	660	1590	1875	102	130	985	1210	970	70	730	802	1760	337	178	1510	215	301	676

* Measurement with legs mounted (30mm)